Course Code: B23BS2104

SAGI RAMA KRISHNAM RAJU ENGINEERING COLLEGE (A) **R23**

II B.Tech. I Semester MODEL QUESTION PAPER

NUMERICAL TECHNIQUES AND STATISTICAL METHODS

For CE

Time: 3 Hrs. **Max. Marks: 70 M**

Answer Question No.1 compulsorily

Answer **ONE Question** from **EACH UNIT**

Assume suitable data if necessary

10 x 2 = 20 Marks

			CO	KL	M
1.	**(a)**	What is transcendental equation? Give an example.	**1**	**1**	**2**
	(b)	Write the formula for Regula- Falsi method	**1**	**1**	**2**
	(c)	State Lagrange's interpolation formula	**2**	**1**	**2**
	(d)	Construct the difference table for the following data x: 0, 1, 2, 3 f(x): 1, 3, 7, 13	**2**	**2**	**2**
	(e)	Write the iterative formula of Trapezoidal rule and Simpson's $\frac{1}{3}$ rule	**3**	**1**	**2**
	(f)	Write Runge-Kutta fourth order formulae	**3**	**1**	**2**
	(g)	For the continuous random variable X, the probability density function is given by $f(x) = \{cx(2-x), if\ 0 \le x \le 2\ 0 \quad , otherwise$ where c is a constant. Find c?	**4**	**3**	**2**
	(h)	Define Binomial distribution.	**4**	**1**	**2**
	(i)	What are the Errors in sampling? Define them.	**5**	**1**	**2**
	(j)	A random sample of size 100 has a standard deviation of 5. What is the maximum error with 95% confidence?	**5**	**2**	**2**

5 x 10 = 50 Marks

		UNIT-1			
2.	**(a)**	Find a real root of the equation $3x = cosx + 1$by bisection method	**1**	**3**	**5**
	(b)	Using Regula-Falsi method, find approximate root of the equation $x^3 - x - 4 = 0$.	**1**	**3**	**5**
		OR			
3.	**(a)**	Find a real root of the equation $2x - logx = 7$ using iteration method	**1**	**3**	**5**
	(b)	Find a root of $e^x sinx = 1$ using Newton-Raphson method	**1**	**3**	**5**

SRKR ENGINEERING COLLEGE AUTONOMOUS Est. 1980

		UNIT-2			
4.	**(a)**	The population of a town in the decennial census was given below. Estimate the population for the year 1895. Year (x): 1891, 1901, 1911, 1921, 1931 Population y (thousands): 46, 66, 81, 93, 101	**2**	**3**	**5**
	(b)	Using Gauss Backward difference formula, find y(8) from the following table. X: 0, 5, 10, 15, 20, 25 Y: 7, 11, 14, 18, 24, 32	**2**	**3**	**5**
		OR			
5	**(a)**	The following table gives corresponding values of x and y. Construct the difference table and then express y as a function of x: x: 0, 1, 2, 3, 4 y: 3, 6, 11, 18, 27	**2**	**3**	**5**
	(b)	Given $u_1 = 22, u_2 = 30, u_4 = 82, u_7 = 106, u_8 = 206$, find u_6 by using Lagrange's interpolation formula.	**2**	**3**	**5**
		UNIT-3			
6.	**(a)**	Evaluate $\int_0^6 \frac{1}{1+x}$ using Trapezoidal rule	**3**	**3**	**5**
	(b)	Given $\frac{dy}{dx} = \frac{y-x}{y+x}$ with y =1for x = 0. Find y approximately for x = 0.1 by Euler's method in five steps.	**3**	**3**	**5**
		OR			
7.		Use Runge-Kutta method to evaluate y (0.1) and y (0.2) given that $y' = x + y, y(0) = 1$.	**3**	**3**	**10**
		UNIT-4			
8.	**(a)**	A businessman goes to hotels X, Y, Z, 20%, 50%, 30% of the time respectively. It is known that 5%, 4%, 8% of the rooms in X, Y, Z hotels have faulty plumbing. What is the probability that businessman's room having faulty plumbing is assigned to hotel Z?	**4**	**3**	**5**
	(b)	A random variable X has the following probability function: X: 0, 1, 2, 3, 4, 5, 6, 7, 8 P(X): $\frac{K}{45}$, $\frac{K}{15}$, $\frac{K}{9}$, $\frac{K}{5}$, $\frac{2K}{45}$, $\frac{6K}{45}$, $\frac{7K}{45}$, $\frac{8K}{45}$, $\frac{4K}{45}$ Determine (i) K (ii) Mean and (iii) Variance .	**4**	**3**	**5**
		OR			

SRKR ENGINEERING COLLEGE AUTONOMOUS Estd. 1980

<table>
<tr><td>9.</td><td></td><td>Fit a binomial distribution to the following data
<table>
<tr><td>x</td><td>0</td><td>1</td><td>2</td><td>3</td><td>4</td><td>5</td></tr>
<tr><td>f</td><td>2</td><td>14</td><td>20</td><td>34</td><td>22</td><td>8</td></tr>
</table></td><td>4</td><td>3</td><td>10</td></tr>
<tr><td></td><td></td><td></td><td></td><td></td><td></td></tr>
<tr><td></td><td></td><td>UNIT-5</td><td></td><td></td><td></td></tr>
<tr><td>10.</td><td></td><td>A population consists of five numbers 2, 3, 6, 8 and 11. Consider all possible samples of size two which can be drawn with replacement from the population. Find
(a) The Mean of the population
(b) The standard deviation of the population
(c) The mean of the sampling distribution of means
(d) The standard deviation of the sampling distribution of means</td><td>5</td><td>3</td><td>10</td></tr>
<tr><td></td><td></td><td>OR</td><td></td><td></td><td></td></tr>
<tr><td>11.</td><td>(a)</td><td>In a sample of 1000 people in Karnataka 540 are rice eaters and the rest are wheat eaters. Can we assume that both rice and wheat are equally popular in the state at 1% level of significance?</td><td>5</td><td>3</td><td>10</td></tr>
<tr><td></td><td>(b)</td><td>In one sample of 8 observations from a normal population, the sum of the squares of deviations of the sample values from the sample mean is 84.4 and in another sample of 10 observations it was 102.6. Test at 5% level whether the populations have the same variance.</td><td>5</td><td>3</td><td>5</td></tr>
</table>

CO-COURSE OUTCOME **KL-KNOWLEDGE LEVEL** **M-MARKS**

NOTE: Questions can be given as A,B splits or as a single Question for 10 marks

SRKR ENGINEERING COLLEGE AUTONOMOUS Estd. 1980

					Course Code: B23HS2101
SAGI RAMA KRISHNAM RAJU ENGINEERING COLLEGE (A)					**R23**
II B.Tech. I Semester MODEL QUESTION PAPER					
UNIVERSAL HUMAN VALUES-2: UNDERSTANDING HARMONY AND ETHICAL HUMAN CONDUCT					
(Common to all programmes of Engineering)					
Time: 3 Hrs.					**Max. Marks: 70 M**
Answer Question No.1 compulsorily					
Answer **ONE Question** from **EACH UNIT**					
Assume suitable data if necessary					
					10 x 2 = 20 Marks
			CO	**KL**	**M**
1.	**a).**	What are the basic guidelines for value education?	**1**	**2**	**2**
	b).	What is MBTI personality test?	**1**	**2**	**2**
	c).	How can we differentiate between the needs of the Self and the needs of the Body?	**2**	**2**	**2**
	d).	What are the characteristics and activities of the Self (I)?	**2**	**2**	**2**
	e).	How is 'respect' defined in the context of human interaction?	**3**	**2**	**2**
	f).	How is society described in relation to the family?	**3**	**2**	**2**
	g).	How are the four orders of nature interconnected?	**4**	**2**	**2**
	h).	How does the idea of self-regulation in nature contribute to its harmony?	**4**	**2**	**2**
	i).	Define definitiveness of (ethical) human conduct.	**5**	**2**	**2**
	j).	Explain how humanistic education can influence professional ethics.	**5**	**2**	**2**
					5 x 10 = 50 Marks
		UNIT - I	**CO**	**KL**	**M**
2.	**a).**	Discuss natural acceptance	**1**	**2**	**5**
	b).	Differentiate prosperity and deprivation	**1**	**2**	**5**
		OR			
3.	**a).**	Deliberate the right understanding in perspective to self exploration.	**1**	**2**	**5**
	b).	What are the key functions of the MBTI? Explain.	**1**	**2**	**5**
		UNIT - II			
4.	**a).**	Illustrate coexistence of "I" and "Body ".	**1**	**2**	**5**
	b).	Distinguishing between the Needs of the Self and the Body	**1**	**2**	**5**
		OR			
5.	**a).**	Discuss Characteristic activities of Harmony with "I".	**1**	**2**	**5**
	b).	Explain Sanyam and Health.	**1**	**2**	**5**

		UNIT - III			
6.	**a).**	Write a note on human-human relationship as regarding harmony.	**2**	**2**	**5**
	b).	Differentiate intention and competence.	**2**	**2**	**5**
		OR			
7.	**a).**	Discuss salient values in relationship.	**3**	**2**	**5**
	b).	Illustrate universal Harmonious Society - an Undivided society.	**3**	**2**	**5**
		UNIT - IV			
8.		Discuss orders of life in nature and its significance self regulation of individual	**4**	**2**	**10**
		OR			
9.		Illustrate existence of human being as coexistence with universe in perspective of space	**4**	**2**	**10**
		UNIT - V			
10.		Discuss importance of professional competence for augmenting universal human order.	**5**	**2**	**10**
		OR			
11.	**a).**	Case study of typical holistic technologies.	**5**	**2**	**5**
	b).	Role of engineer in promoting harmony in society	**5**	**2**	**5**

CO-COURSE OUTCOME **KL-KNOWLEDGE LEVEL** **M-MARKS**

NOTE: Questions can be given as A,B splits or as a single Question for 10 marks

SRKR ENGINEERING COLLEGE AUTONOMOUS

					Course Code: B23CE2101
SAGI RAMA KRISHNAM RAJU ENGINEERING COLLEGE (A)					**R23**
II B.Tech. I Semester MODEL QUESTION PAPER					
SURVEYING					
For CE					
Time: 3 Hrs.					**Max. Marks: 70 M**
Answer Question No.1 compulsorily					
Answer **ONE Question** from **EACH UNIT**					
Assume suitable data if necessary					
					10 x 2 = 20 Marks
			CO	**KL**	**M**
1.	**a).**	Define surveying and list out its various classification.	**1**	**1**	**2**
	b).	Convert the following WCB into RB (a)112°04' (b)339°42'.	**1**	**2**	**2**
	c).	Explain various methods of interpolating the contours.	**2**	**2**	**2**
	d).	Define the Simpsons rule.	**2**	**1**	**2**
	e).	Explain in detail about 3 main parts of theodolite.	**3**	**2**	**2**
	f).	Explain in detail about most accurate method in traversing.	**3**	**2**	**2**
	g).	Explain the limitations of tacheometry.	**4**	**2**	**2**
	h).	Explain about types of curves in surveying.	**4**	**2**	**2**
	i).	Define photogrammetry? Write its significance/uses in surveying.	**5**	**1**	**2**
	j).	Explain the following: 1)Vertical Photograph 2)Camera axis	**5**	**2**	**2**
					5 x 10 =50Marks
		UNIT-1			
2.	**a).**	Explain in detail about the principles and classifications of surveying	**1**	**2**	**5**
	b).	A 30m chain used for a survey was found to be 30.10m at the beginning and 30.30m at the end of the work. The area of the plan drawn to a scale of 1cm=8m was measured with the help of a planimeter and was found to be 42.56 sq.cm. find the true area of the field.	**1**	**3**	**5**
		OR			
3.	**a).**	Explain different tape corrections to applied for measured length?	**1**	**2**	**5**
	b).	A closed compass traverse ABCDE was run and observed bearings of the lines were obtained as under. Calculate and correct the bearings for local attraction.	**1**	**3**	**5**

Line	FB	BB
AB	75°45'	252°00'
BC	349°00'	167°15'
CD	298°30'	118°30'
DE	299°00'	48°00'
EA	135°30'	319°00'

		UNIT-2			
4.	**a).**	Explain in detail about temporary and permanent adjustments of level.	**2**	**2**	**5**
	b).	**E**xplain about the characteristics and uses of contours.	**2**	**2**	**5**
		OR			
5.		The following perpendicular offsets were taken at 10 meters intervals from a survey line to an irregular boundary line:3.25,5.60,4.20,6.65,8.75,6.20,3.25,4.20,5.65. Calculate the area enclosed between the survey line, the irregular boundary line and the first and last offsets, by the application of a) average ordinate rule b) trapezoidal rule c) Simpsons rule	**2**	**3**	**10**
		UNIT-3			
6.	**a).**	Determine the horizontal angle by using the repetition method.	**3**	**3**	**5**
	b).	Determine the vertical angle by using the trigonometrical levelling when the base is in accessible.	**3**	**3**	**5**
		OR			
7.	**a).**	Explain any one method of balancing the traverse in detail.	**3**	**3**	**5**
	b).	The following measurements were made in a closed traverse ABCD: AB=97.54m; CD:170.69m; DA=248m; <DAB=70°45´ <ADC=39°15´.Calculate the missing measurements.	**3**	**3**	**5**
		UNIT-4			
8.	**a).**	Determine the general tacheometric equation.	**4**	**3**	**5**
	b).	A tacheometer was setup at a station 'A' and the readings on a vertically held staff at 'B' were 2.255, 2.605, and 2.955, the line of sight being at a inclination of +8°24´.another observation on the vertically held staff at B.M gave the readings 1.640,1.920 and 2.200 , the inclination of the line of sight being +1°06´.calculate the horizontal distance between A and B, and the elevation of B if the RL of B.M is 418.685 meters. The constants of instruments are 100 and 0.3.	**4**	**3**	**5**
		OR			
9.	**a).**	Determine the elements of simple curve.	**4**	**3**	**5**
	b).	Calculate the ordinates at 10 meters distances for a circular curve having a long chord of 80 meters and a versed sign of 4m.	**4**	**3**	**5**
		UNIT-5			
10.	**a).**	Explain the global positioning system with a neat diagram.	**5**	**2**	**5**
	b).	Explain about the drone survey and LiDAR Survey.	**5**	**2**	**5**
		OR			
11.	**a).**	Illustrate an expression to find the scale of a vertical photograph.	**5**	**2**	**5**
	b).	Explain with reference to a real photographs, what is meant by end overlap and side overlap and why they are provided?	**5**	**2**	**5**

CO-COURSE OUTCOME **KL-KNOWLEDGE LEVEL** **M-MARKS**

NOTE: Questions can be given as A,B splits or as a single Question for 10 marks

					Course Code: B23CE2102
SAGI RAMA KRISHNAM RAJU ENGINEERING COLLEGE (A)					**R23**
II B.Tech. I Semester MODEL QUESTION PAPER					
STRENGTH OF MATERIALS					
For CE					
Time: 3 Hrs.					**Max. Marks: 70 M**
First Question is compulsory					
Answer all the questions. All questions carry equal marks					
					10 x 2 = 20 Marks
			CO	**KL**	**M**
1.	**a).**	Define stress and strain.	**1**	**1**	**2**
	b).	State Hook's Law.	**1**	**1**	**2**
	c).	Write any four types of beams with neat sketches.	**2**	**2**	**2**
	d).	Define point of contraflexure.	**2**	**1**	**2**
	e).	Define section modulus.	**3**	**1**	**2**
	f).	Write the expression for maximum shear stress in rectangular section.	**3**	**1**	**2**
	g).	Define principal stress and Principal plane.	**4**	**1**	**2**
	h).	Write the expression for maximum deflection in cantilever beam carrying point load at free end.	**4**	**1**	**2**
	i).	Define slenderness ratio.	**5**	**1**	**2**
	j).	Write the expression for polar moment of inertia of circular shaft.	**5**	**1**	**2**
Answer **ONE Question** from **EACH UNIT**					
All questions carry equal marks					
Assume suitable data if necessary					
					5 x 10 = 50 Marks
		UNIT-1			
2.	**a).**	Derive the relationship between Young's modulus(E), Bulk modulus (K) and poisson's ratio(μ).	**1**	**3**	**5**
	b).	A bar of 20 mm diameter is tested in tension. It is observed that when a load of 37.7 kN is applied, the extension measured over a gauge length of 200 mm is 0.12 mm and contraction in diameter is 0.0036 mm. Find the Poisson's ratio and young's modulus.	**1**	**3**	**5**
		OR			
3.		A member ABCD is subjected to point loads P_1, P_2, P_3 and P_4 as shown in fig. 1a. Calculate the force P_2 necessary for equilibrium if P_1 = 45kN, P_3= 450 kN and P_4 = 130 kN. Determine the total elongation of the member, assuming the modulus of elasticity to be 210 GN/m^2. 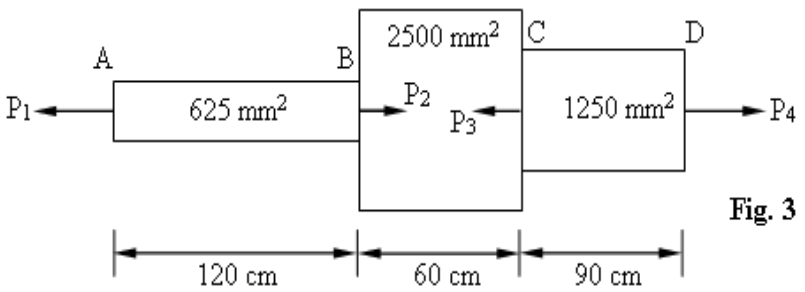 **Fig. 3**	**1**	**3**	**10**

		UNIT-2			
4.		Draw SFD and BMD for the cantilever beam shown below. 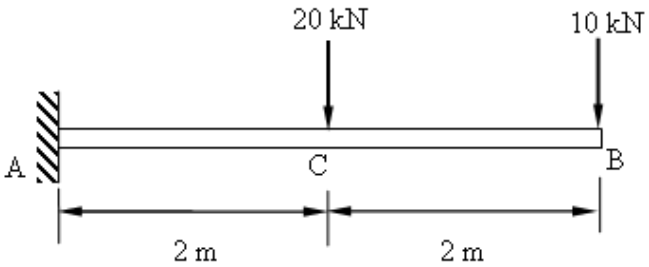 **Fig. 4**	**2**	**3**	**10**
		OR			
5.		Draw SFD and BMD for the simply supported beam shown below. 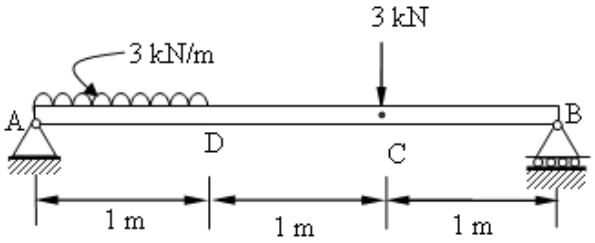 **Fig. 5**	**2**	**3**	**10**
		UNIT-3			
6.		State the assumptions in theory of simple bending and derive the bending equation.	**3**	**3**	**10**
		OR			
7.		A symmetrical I- section has a total depth 200 mm, flange width of 120 mm, flange thickness 15 mm and web thickness of 10mm. The beam is subjected to a shear force 50 kN. Plot the shear stress distribution across the section.	**3**	**3**	**10**
		UNIT-4			
8.		The stresses at point of machine component are 150 MPa and 100MPa both tensile. Determine the intensities of normal, shear and resultant stresses on a plane inclined at an angle of 55° with the axis of major tensile stress. Also calculate the magnitude of the maximum shear stress in the component.	**4**	**3**	**10**
		OR			
9.		Determine the deflection under 8 kN load and slope at one of the supports in beam shown in figure below. Take EI as constant. 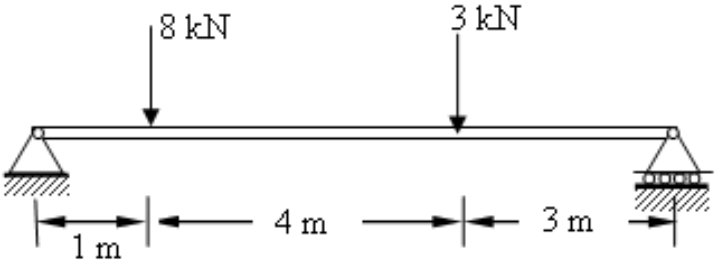 **Fig. 9**	**4**	**3**	**10**

		UNIT-5			
10.		A 1.5 m long Cast Iron column has a circular cross-section of 5 cm diameter. One end of the column is fixed and the other is free. Taking factor of safety as 3, calculate the safe load using: i) Rankine formula, take yield stress 560 MN/mm^2, and $\alpha = 1/1600$ for pinned ends. ii) Euler's formula. Young's Modulus for Cast Iron = 120 GPa.	**5**	**3**	**10**
		OR			
11.		Determine the maximum shear stress induced in a solid circular shaft of diameter 15 cm, when the shaft transmits 150 kw power at 180 rpm.	**5**	**3**	**10**

CO-COURSE OUTCOME **KL-KNOWLEDGE LEVEL** **M-MARKS**

NOTE: Questions can be given as A, B splits or as a single Question for 10 marks

Estd. 1980
SRKR
ENGINEERING COLLEGE
AUTONOMOUS

					Course Code: B23CE2103
		SAGI RAMA KRISHNAM RAJU ENGINEERING COLLEGE (A)			**R23**
		II B.Tech. I Semester MODEL QUESTION PAPER			
		FLUID MECHANICS			
		For CE			
Time: 3 Hrs.					**Max. Marks: 70 M**
		Answer Question No.1 compulsorily			
		Answer **ONE Question** from **EACH UNIT**			
		Assume suitable data if necessary			
					10 x 2 = 20 Marks
			CO	**KL**	**M**
1.	**a).**	Explain the terms i) Kinematic viscosity and ii) Dynamic viscosity. Give their Dimensions.	**1**	**2**	**2**
	b).	Calculate the Specific Weight, Density and Specific gravity of 1 litre of liquid which weighs 7N.	**1**	**3**	**2**
	c).	State Pascals Law.	**2**	**1**	**2**
	d).	Explain the Difference between Piezometer and Pressure gauges.	**2**	**2**	**2**
	e).	Illustrate Continuity equation.	**3**	**2**	**2**
	f).	Explain Stream line and streak line.	**3**	**2**	**2**
	g).	Explain the major difference between Venturimeter and Orificemeter.	**4**	**2**	**2**
	h).	List non-dimensional numbers.	**4**	**1**	**2**
	i).	Explain energy losses in pipelines.	**5**	**2**	**2**
	j).	Describe the concept of equivalent length of a pipe.	**5**	**2**	**2**
					5 x 10 =50Marks
		UNIT-1			
2.	**a).**	Explain the concept of Bulk modulus of elasticity.	**1**	**2**	**5**
	b).	If 10,000 litres of certain liquid weigh 1329KN. Determine i)Specific weight ii) Mass density iii) Specific Volume iv) Specific gravity.	**1**	**3**	**5**
		OR			
3.	**a).**	Illustrate the relationship between surface tension and pressure inside a droplet of liquid in excess of outside pressure is given by $p = 4\sigma / d$.	**1**	**2**	**5**
	b).	Calculate the capillarity effect in millimeters a glass tube of 4mm diameter, when immersed in (a) water (b) mercury. The temperature of the liquid is 20^0 C and the values of the surface tension of water and mercury at 20^0 C in contact with air are 0.073575 and 0.51 N/m respectively. The angle of contact for water is zero that for mercury 130^0. Take specific weight of water as $9790 N/m^3$.	**1**	**3**	**5**

		UNIT-2			
4.	**a).**	Determine an expression for the pressure intensity at a point in a fluid.	**2**	**2**	**5**
	b).	A U- tube manometer is used to measure the pressure of water in a pipe line which is in excess of atmospheric pressure. The right limb of the manometer contains mercury and is open to atmosphere. The contact between water and mercury is in the left limb. Determine the pressure of water in the main line, if the difference in level of mercury in the limbs of U-tube is 10cm and the free surface of mercury is in level with the center of the pipe. If the pressure of water in pipe line is reduced to 9810N/m^2.calculate the new difference in the level of mercury. Sketch the arrangements in both cases.	**2**	**3**	**5**
		OR			
5.	**a).**	Illustrate the relation between Gauge pressure, Absolute pressure and Atmospheric pressure.	**2**	**2**	**5**
	b).	Explain Buoyancy. And find the volume of the water displaced and position of Centre of buoyancy for a wooden block of width 2.5m and depth 1.5m, when it floats horizontally in water. The density of wooden block is 650 kg / m^3 and its length 6.0m.	**2**	**3**	**5**
		UNIT-3			
6.	**a).**	Explain i) Steady flow & unsteady flow i) One dimensional & two-dimensional flow ii) Stream line & path line	**3**	**2**	**5**
	b).	When 2500 liters of water flows per minute through a 0.3m diameter pipe which later reduces to a 0.15 m diameter pipe, calculate the velocities of flow in the two pipes.	**3**	**3**	**5**
		OR			
7.	**a).**	Illustrate an expression of continuity equation in cartesian coordinates.	**3**	**2**	**5**
	b).	In a Two-dimensional incompressible flow, the fluid velocity components are given by u=x-4y& v=-y-4x. Show that velocity potential exist and determine its form. Find also the stream function.	**3**	**3**	**5**
		UNIT-4			
8.	**a).**	Explain Bernoulli's theorem, mentioning clearly the assumptions underlying it.	**4**	**2**	**5**
	b).	An oil of specific gravity 0.8 is flowing through a Venturimeter having inlet diameter 20cm and throat diameter 10cm. The oil-mercury differential manometer shows a reading of 25cm. Calculate the discharge of oil through the horizontal Venturimeter. Take C_d= 0.98.	**4**	**3**	**5**
		OR			
9.	**a).**	Explain the terms Reynolds number, Froude number, Mach number, Weber number and Euler number.	**4**	**2**	**5**

SRKR ENGINEERING COLLEGE AUTONOMOUS Estd 1980

	b).	In a free cylindrical vortex flow of water, at a point at a radius of 150mm the velocity and pressure are 5 m/s and 14.715 N/cm^2. Find the pressure at a radius of 300mm.	**4**	**3**	**5**
		UNIT-5			
10.	**a).**	Illustrate Darcy-Weisbach equation for head loss through a pipe.	**5**	**2**	**5**
	b).	Water is flowing through a horizontal pipe line 1500 m long and 200 mm in diameter, Pressures at the two ends of the pipe line are respectively 12 kPa and 2 kPa. If f = 0.015, determine the discharge through the pipe in liters per minute. Consider only frictional loss.	**5**	**3**	**5**
		OR			
11.	**a).**	Explain Hydraulic grade line with total energy line.	**5**	**2**	**5**
	b).	A main pipe divides into two parallel pipes which again forms one pipe (Flow through parallel pipe). The length and diameter for the first parallel pipe are 2000 m and 1.0 m respectively, while the length and diameter of 2nd Parallel pipe are 2000 m and 0.8 m. Find the rate of flow in each parallel pipe, if total flow in the main is 3.0 m^3 /s. The friction factor for each parallel pipe is same and equal to 0.02.	**5**	**3**	**5**

CO-COURSE OUTCOME **KL-KNOWLEDGE LEVEL** **M-MARKS**

NOTE: Questions can be given as A,B splits or as a single Question for 10 marks

					Course Code: B23HS2201
SAGI RAMA KRISHNAM RAJU ENGINEERING COLLEGE (A)					**R23**
II B.Tech. II Semester MODEL QUESTION PAPER					
MANAGERIAL ECONOMICS AND FINANCIAL ANALYSIS					
(Common to AIDS, CSE, CIC, CSG, CSIT, CE, ECE, EEE, ME)					
Time: 3 Hrs.					**Max. Marks: 70 M**
Answer Question No.1 compulsorily					
Answer **ONE Question** from **EACH UNIT**					
Assume suitable data if necessary					
					10 x 2 = 20 Marks
			CO	**KL**	**M**
1.	**a)**	Define Managerial Economics.	**1**	**1**	**2**
	b)	State the Importance of Demand forecasting.	**1**	**1**	**2**
	c)	Write about Fixed cost and Variable cost.	**2**	**1**	**2**
	d)	List out the Applications of Break-even analysis.	**2**	**1**	**2**
	e)	Define Double Entry System of Accounting.	**3**	**1**	**2**
	f)	List the items under Current assets and Current liabilities.	**4**	**1**	**2**
	g)	Name the types of Imperfect Competition.	**5**	**1**	**2**
	h)	Identify the methods of Internet Pricing.	**5**	**1**	**2**
	i)	Show the components of working capital cycle.	**6**	**1**	**2**
	j)	Write the importance of Depreciation.	**6**	**1**	**2**
					5 x 10 =50Marks
		UNIT-1	**CO**	**KL**	**M**
2.	a)	Compare the differences between Micro and Macro Economics.	**1**	**2**	**5**
	b)	Explain the Scope of Managerial Economics.	**1**	**2**	**5**
		OR			
3.	**a)**	Explain the determinants of Demand.	**1**	**2**	**5**
	b)	Describe the types of Elasticity of Demand.	**1**	**2**	**5**
		UNIT-2			
4.	**a)**	Illustrate the Elements of costs with suitable examples.	**2**	**2**	**5**
	b)	Define Cost. Explain the types of Costs.	**2**	**2**	**5**
		OR			
5.	**a)**	Interpret the determination of Break-even point with graphical representation.	**2**	**2**	**5**
	b)	Identify the Assumptions and Limitations of Break-even analysis.	**2**	**2**	**5**

SRKR ENGINEERING COLLEGE AUTONOMOUS Estd. 1980

		UNIT-3			
6.		Write the importance of Accounting and explain the types of accounts with rules governing each account.	**3**	**2**	**10**
		OR			
7.		Illustrate the proforma for Trading and Profit and loss account and Balance sheet including items in each account.	**4**	**2**	**10**
		UNIT-4			
8.	**a)**	Outline the salient features of Perfect competition.	**5**	**2**	**5**
	b)	Discuss the features of Oligopoly.	**5**	**2**	**5**
		OR			
9.	**a)**	Explain different methods of Cost Based Pricing.	**5**	**2**	**5**
	b)	Describe the Competition Based pricing methods.	**5**	**2**	**5**
		UNIT-5			
10.	**a)**	Discuss the factors influencing Working capital.	**5**	**2**	**5**
	b)	Explain the Sources of Raising finance in long term.	**5**	**2**	**5**
		OR			
11.	**a)**	Define Depreciation. Explain the causes of Depreciation in detail.	**6**	**2**	**5**
	b)	Explain the methods of Depreciation.	**6**	**2**	**5**

CO-COURSE OUTCOME **KL-KNOWLEDGE LEVEL** **M-MARKS**

NOTE: Questions can be given as A,B splits or as a single Question for 10 marks

SRKR ENGINEERING COLLEGE AUTONOMOUS Estd. 1980

					Course Code: B23CE2201
SAGI RAMA KRISHNAM RAJU ENGINEERING COLLEGE (A)					**R23**
II B.Tech. II Semester MODEL QUESTION PAPER					
ENGINEERING GEOLOGY					
For CE					
Time: 3 Hrs.					**Max. Marks: 70 M**
Answer Question No.1 compulsorily					
Answer **ONE Question** from **EACH UNIT**					
Assume suitable data if necessary					
					10 x 2 = 20 Marks
			CO	**KL**	**M**
1.	**a).**	Give examples of Civil Engineering project where geological knowledge is crucial.	**1**	**2**	**2**
	b).	Name two geological agents responsible for weathering.	**1**	**1**	**2**
	c).	How can you identify Mica group minerals megascopically?	**2**	**2**	**2**
	d).	List the common forms of igneous rocks?	**2**	**1**	**2**
	e).	Define outcrop in geology.	**3**	**1**	**2**
	f).	Describe the difference between a normal fault and a reverse fault.	**3**	**2**	**2**
	g).	Describe formation of cone of depression around a pumping well.	**4**	**2**	**2**
	h).	Identify two natural causes of landslides.	**4**	**2**	**2**
	i).	Show the parts of a Gravity Dam in a diagram.	**5**	**1**	**2**
	j).	Explain importance of lining in tunnel construction?	**5**	**2**	**2**
					5 x 10 = 50 Marks
		UNIT - I	**CO**	**KL**	**M**
2.	**a).**	Explain the importance of geology in civil engineering, using specific case studies to illustrate your points.	**1**	**2**	**5**
	b).	Discuss the various branches of geology and explain how each branch contributes to our understanding of Earth's processes.	**1**	**2**	**5**
		OR			
3.	**a).**	Differentiate between physical and chemical weathering, providing examples of each.	**1**	**2**	**5**
	b).	Explain the geological work of rivers and their impact on shaping the Earth's surface.	**1**	**2**	**5**
		UNIT - II			
4.	**a).**	Explain the physical properties of Quartz and Feldspar that aid in their identification during a Megascopic study.	**2**	**2**	**5**
	b).	Discuss the significance of rock classification in determining the	**2**	**2**	**5**

		engineering properties of rocks used in civil engineering projects.			
		OR			
5.	**a).**	Describe the different methods used to study minerals and explain how these methods contribute to mineral identification.	**2**	**2**	**5**
	b).	Compare the engineering properties of marble and quartzite and their suitability for use in construction.	**2**	**2**	**5**
		UNIT - III			
6.	**a).**	Discuss the different types of folds and how they can impact the stability of civil engineering structures.	**3**	**2**	**5**
	b).	Discuss the different types of faults commonly found in geological formations.	**3**	**2**	**5**
		OR			
7.	**a).**	Explain how the presence of joints in rock masses can influence the stability and design of a tunnel.	**3**	**2**	**5**
	b).	Explain the significance of unconformities in geological strata.	**3**	**2**	**5**
		UNIT - IV			
8.	**a).**	Outline the key techniques used in groundwater exploration and their importance.	**4**	**2**	**5**
	b).	Describe the precautions that should be taken in building constructions in seismic areas to minimize earthquake damage.	**4**	**2**	**5**
		OR			
9.	**a).**	Discuss the importance of geophysical methods in subsurface exploration for civil engineering projects.	**4**	**2**	**5**
	b).	Explain the working principles of the electrical resistivity method and how it is used to identify subsurface features.	**4**	**2**	**5**
		UNIT - V			
10.	**a).**	Explain the geological factors that should be considered when selecting a dam site.	**5**	**2**	**5**
	b).	Explain the geological considerations crucial for the successful construction of reservoirs.	**5**	**2**	**5**
		OR			
11.	**a).**	Describe the different types of tunnels and their purposes.	**5**	**2**	**5**
	b).	Explain the purpose of lining tunnels and discuss how geological conditions influence the choice of lining materials.	**5**	**2**	**5**

CO-COURSE OUTCOME **KL-KNOWLEDGE LEVEL** **M-MARKS**

NOTE: Questions can be given as A,B splits or as a single Question for 10 marks

SRKR ENGINEERING COLLEGE AUTONOMOUS Estd. 1980

					Course Code: B23CE2202
SAGI RAMA KRISHNAM RAJU ENGINEERING COLLEGE (A)					**R23**
II B.Tech. II Semester MODEL QUESTION PAPER					
CONCRETE TECHNOLOGY					
For CE					
Time: 3 Hrs.					**Max. Marks: 70 M**
Answer Question No.1 compulsorily					
Answer **ONE Question** from **EACH UNIT**					
Assume suitable data if necessary					
					10 x 2 = 20 Marks
			CO	**KL**	**M**
1.	**a).**	Explain the process of hydration in cement.	**1**	**2**	**2**
	b).	Describe the concept of soundness in aggregates.	**1**	**2**	**2**
	c).	Describe the importance of proper mixing in concrete production.	**2**	**2**	**2**
	d).	Explain the concept of ready-mix concrete.	**2**	**2**	**2**
	e).	Explain the concept of gel space ratio in concrete	**3**	**2**	**2**
	f).	Describe the maturity concept in concrete.	**3**	**2**	**2**
	g).	Explain the concept of elasticity in concrete.	**4**	**2**	**2**
	h).	Differentiate between shrinkage and creep in concrete.	**4**	**2**	**2**
	i).	Describe the typical applications of polymer concrete.	**5**	**2**	**2**
	j).	Difference between conventional concrete and special concrete.	**5**	**2**	**2**
					5 x 10 =50Marks
		UNIT-1			
2.	**a).**	Describe Bogue's compounds and explain their significance.	**1**	**2**	**5**
	b).	Explain the role of plasticizers and super plasticizers in modifying the properties of concrete.	**1**	**2**	**5**
		OR			
3.	**a).**	Explain the phenomenon of alkali-aggregate reaction and its impact on concrete durability.	**1**	**2**	**5**
	b).	Explain the significance of fineness modulus and maximum aggregate size in concrete mix design.	**1**	**2**	**5**
		UNIT-2			
4.	**a).**	Explain what is meant by the term "workability" in concrete and describe how different factors influence it.	**2**	**2**	**5**
	b).	Explain various steps in manufacturing process of concrete?	**2**	**2**	**5**
		OR			

SRKR ENGINEERING COLLEGE AUTONOMOUS Estd. 1980

5.	**a).**	Explain the effect of time and temperature on workability	**2**	**2**	**5**
	b).	Describe the concepts of segregation and bleeding in concrete.	**2**	**2**	**5**
		UNIT-3			
6.	**a).**	Explain the term Gel/space ratio and its relationship with strength of concrete.	**3**	**2**	**5**
	b).	Discuss the factors affecting the strength of hardened concrete?	**3**	**2**	**5**
		OR			
7.	**a).**	Explain the relationship between the compression strength and tensile strength of concrete.	**3**	**2**	**5**
	b).	Describe the codal provisions for Non-Destructive Testing (NDT) in concrete.	**3**	**2**	**5**
		UNIT-4			
8.	**a).**	Explain the elastic properties of concrete.	**4**	**2**	**5**
	b).	Explain the term shrinkage of concrete and describe types of shrinkage.	**4**	**2**	**5**
		OR			
9.	**a).**	Explain phenomenon of creep in concrete and its measurement with loading diagram	**4**	**2**	**5**
	b).	Explain various factors influencing creep in concrete.	**4**	**2**	**5**
		UNIT-5			
10.		Design a concrete mix for characteristic strength of 35MPa at 28 days with a standard deviation of 5MPa.The specific gravity of FA and CA are 2.60 and 2.70respectively. A slump of 50mm is necessary. The specific gravity of cement is3.15. Assuming the necessary data design the mix as per IS code method.	**5**	**3**	**10**
		OR			
11.	**a).**	Explain about fiber reinforced concrete and its typical applications.	**5**	**2**	**5**
	b).	Explain about geopolymer concrete and its advantages over conventional concrete.	**5**	**2**	**5**

CO-COURSE OUTCOME **KL-KNOWLEDGE LEVEL** **M-MARKS**

NOTE: Questions can be given as A,B splits or as a single Question for 10 marks

					Course Code:B23CE2203
SAGI RAMA KRISHNAM RAJU ENGINEERING COLLEGE (A)					**R23**
II B.Tech. II Semester MODEL QUESTION PAPER					
STRUCTURAL ANALYSIS					
For CE					
Time: 3 Hrs.					**Max. Marks: 70 M**
Answer Question No.1 compulsorily					
Answer **ONE Question** from **EACH UNIT**					
Assume suitable data if necessary					
					10 x 2 = 20 Marks
			CO	**KL**	**M**
1.	**a).**	State Mohr's theorem's I and II.	**1**	**1**	**2**
	b).	Define Strain energy. Write the expression for strain energy due to bending moment.	**1**	**1**	**2**
	c).	Define a propped cantilever beam?	**2**	**1**	**2**
	d).	Define degree of indeterminacy and what is the degree of indeterminacy for fixed beam?	**2**	**1**	**2**
	e).	Define a continuous beam.	**3**	**1**	**2**
	f).	Explain side sway?	**3**	**2**	**2**
	g).	Write the generalized form of slope deflection equation.	**4**	**1**	**2**
	h).	Explain kinematic indeterminacy?	**4**	**2**	**2**
	i).	Define Equivalent UDL.	**5**	**1**	**2**
	j).	Explain the importance of influence line.	**5**	**2**	**2**
					5 x 10 =50Marks
		UNIT-1			
2.		Determine slopes at A and B, Deflection at C for the beam shown below. Take E= 200×10^{6}kN/m^{2}, I= 160×10^{-6} m^{4}. 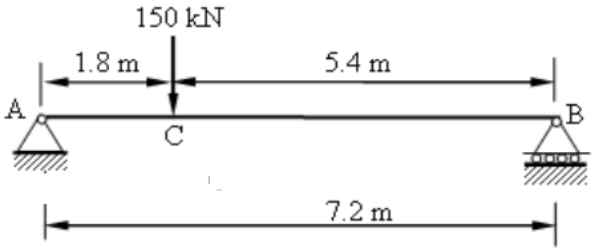 Fig. 1	**1**	**3**	**10**
		OR			
3.		Determine the vertical deflection at the point B of the pin jointed truss shown in the figure below using unit load method. The C/S area of AB	**1**	**3**	**10**

		and BC is 10 cm² and of AD,DB and DC is 15 cm² each.Take E=2×10^5 N/mm^2. 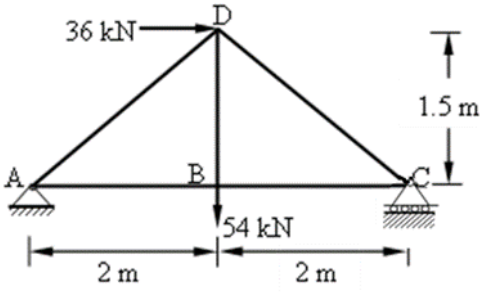 Fig. 2			
		UNIT-2			
4.		Analyze the beam shown in the figure3 and draw bending moment diagram. 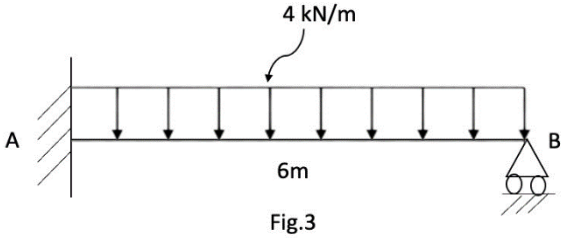 Fig.3	**2**	**3**	**10**
		OR			
5.		A beam AB 4m fixed at A and B carries a UDL of 1500 N/m all over span. The support B sinks by 1cm. Determine the fixed end moments and draw BMD for the beam. Take E=2×10^5 N/mm^2, I = 8000cm^4.	**2**	**3**	**10**
		UNIT-3			
6.		A beam ABCD is continuous over three spans AB = 8m, BC = 4m and CD = 8m. The beam AB and BC is subjected to a uniformly distributed load of 1.5kN/m, whereas there is a central point load of 4kN in CD. The moment of inertia of AB and CD is 2I and that of BC is I. The end A and D are simply supported. Determine the support moments by Theorem of three moments method and draw BMD. Take E = 200Gpa and I = 16×10^6mm^4.	**3**	**3**	**10**
		OR			
7.		Analyse the portal frame shown in fig. 4 using force method and draw shear force and bending moment diagrams. 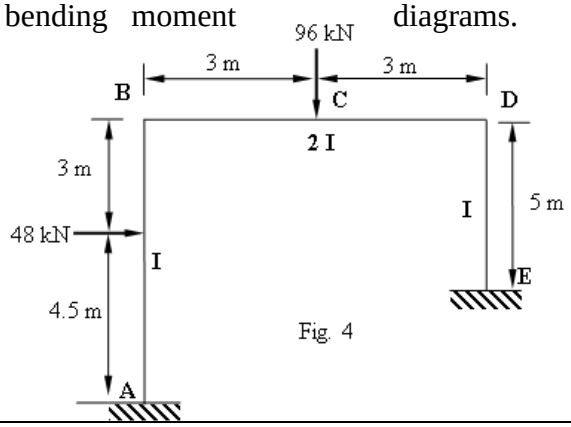 Fig. 4	**3**	**3**	**10**

		UNIT-4			
8.		Analyze the continuous beam as shown in Fig 5 by slope-deflection method, Draw bending moment diagram. 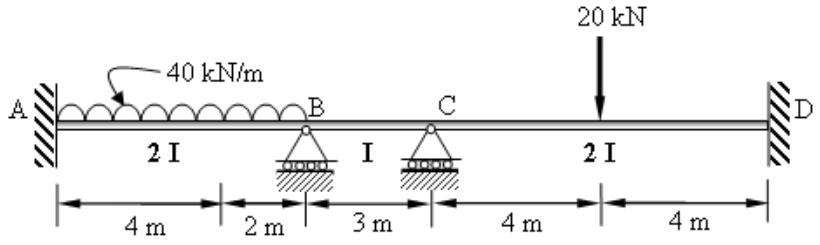 Fig. 5	**4**	**3**	**10**
		OR			
9.		Analyse the portal frame shown in fig. 6 using slope deflection method and draw shear force and bending moment diagrams. 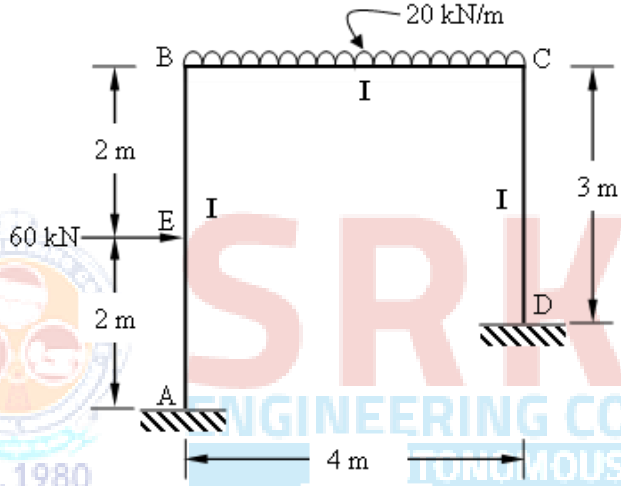 Fig. 6	**4**	**3**	**10**
		UNIT-5			
10.		A uniformly distributed load of 90 kN/m and 6 m long rolls across a simply supported beam of 16 m long. Calculate the maximum shear force and maximum bending moment at a section 4 m from the left-hand support and at a section 10 m from the left-hand support using influence line diagrams. Also determine absolute maximum bending moment.	**5**	**3**	**10**
		OR			
11.		A system of 4 loads separated by a specified distance as shown in figure7 crosses a simply supported beam of 18 m span from left to right. Determine the absolute maximum bending moment on the beam and maximum shear force using ILD's. 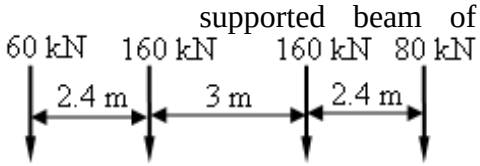 Fig. 7	**5**	**3**	**10**

CO-COURSE OUTCOME **KL-KNOWLEDGE LEVEL** **M-MARKS**

NOTE: Questions can be given as A,B splits or as a single Question for 10 marks

SRKR ENGINEERING COLLEGE AUTONOMOUS Estd. 1980

					Course Code: B23CE2204
SAGI RAMA KRISHNAM RAJU ENGINEERING COLLEGE (A)					**R23**
II B.Tech. II Semester MODEL QUESTION PAPER					
HYDRAULICS AND HYDRAULIC MACHINERY					
For CE					
Time: 3 Hrs.					**Max. Marks: 70 M**
Answer Question No.1 compulsorily					
Answer **ONE Question** from **EACH UNIT**					
Assume suitable data if necessary					
					10 x 2 = 20 Marks
			CO	**KL**	**M**
1.	**a).**	Illustrate laminar flow.	**1**	**2**	**2**
	b).	Illustrate dimensional homogeneity.	**1**	**2**	**2**
	c).	Compare Open channel flow and pipe flow.	**2**	**2**	**2**
	d).	Explain Hydraulic radius and Hydraulic depth.	**2**	**2**	**2**
	e).	Explain specific energy.	**3**	**2**	**2**
	f).	Explain the backwater curve and afflux.	**3**	**2**	**2**
	g).	Explain the force exerted on a stationary flat plate held normal to the jet.	**4**	**2**	**2**
	h).	Compare impulse and reaction turbines.	**4**	**2**	**2**
	i).	Describe the manometric and overall efficiencies of the centrifugal pump.	**5**	**2**	**2**
	j).	Describe the characteristics of centrifugal pumps.	**5**	**2**	**2**
					5 x 10 =50Marks
		UNIT-1			
2.	**a).**	Describe the Reynolds experiment.	**1**	**2**	**5**
	b).	A fluid of viscosity 8 poise and specific gravity 1.2 flows through a circular pipe of diameter 100 mm. The maximum shear stress at the pipe wall is 210 N/m^2. Calculate i) The pressure gradient, ii) The average velocity and iii) Reynold's number.	**1**	**3**	**5**
		OR			
3.		The velocity distribution in the boundary layer is given by $\frac{u}{U} = \left(\frac{3}{2}\right) * \left(\frac{y}{\delta}\right) - \left(\frac{1}{2}\right) * \left(\frac{y}{\delta}\right)^3$, being the boundary layer thickness, Calculate: (i) Displacement thickness.	**1**	**3**	**10**

		(ii) Momentum thickness and (iii) Energy thickness.			
		UNIT-2			
4.		A channel of the trapezoidal section has a bed width of 8 m and a bed slope of 1 in 4000. If the flow depth is 2.4 m and the side slopes of the channel are 1 horizontal to 3 verticals, calculate the channel's average velocity of flow and discharge. Also, compute the average shear stress at the channel boundary. Take Chezy's constant (C), which is 55.	**2**	**3**	**10**
		OR			
5.	**a).**	Explain the most economical section of a rectangular channel.	**2**	**2**	**4**
	b).	Calculate the most economical section of a rectangular channel carrying water at the rate of 0.5 m3/sec, the bed slope of the channel being 1 in 2000. Take Chezy's constant C = 50.	**2**	**3**	**6**
		UNIT-3			
6.	**a).**	Describe a specific energy curve with a neat sketch.	**3**	**2**	**4**
	b).	An 8 m wide channel conveys 15 m3/sec of water at a depth of 1.2 m. Calculate i. The specific energy of the flowing water, ii. Critical depth, critical velocity and minimum specific energy iii. Froude number and state whether the flow is sub-critical or super-critical.	**3**	**3**	**6**
		OR			
7.	**a).**	Describe a hydraulic jump in an open channel.	**3**	**2**	**4**
	b).	A sluice gate discharges water into the horizontal rectangular channel with a velocity of 10 m/sec and a depth of 1 m. Calculate the water flow depth after the jump and consequent loss in total head.	**3**	**3**	**6**
		UNIT-4			
8.		A jet of water from a nozzle is deflected through 60° from its original direction by a curved plate, which it enters tangentially without shock with a velocity of 30 m/s and leaves with a mean velocity of 25 m/s. Suppose the discharge from the nozzle is 0.8 kg/s. Calculate the magnitude and direction of the resultant force on a vane if the vane is stationary.	**4**	**3**	**10**
		OR			
9.		A Pelton wheel receives water from penstock with a gross head of 510 m. One-third of the gross head is lost in friction in the penstock. The flow rate through the nozzle fitted at the end of the penstock is 2.20 m^3/s. The angle of deflection of the jet is 165^0. Calculate the power	**4**	**3**	**10**

SRKR ENGINEERING COLLEGE AUTONOMOUS Estd. 1980

		given by water to the runner and the hydraulic efficiency of the Pelton wheel. Take the coefficient of velocity (C_v) = 1.0 and speed ratio = 0.45.			
		UNIT-5			
10.	**a).**	The impeller of a centrifugal pump has an external diameter of 450 mm and an internal diameter of 200 mm, and it runs at 1440 rpm. Assuming a constant radial flow through the impeller at 2.5 m/sec and that the vanes at the exit are set back at an angle of 25^0. Calculate i) Inlet vane angle, ii) The angle absolute velocity of water at exit makes with the tangent and iii)The work done per Neutons of water	**5**	**3**	**10**
		OR			
11.	**a).**	A centrifugal pump is to discharge 0.118 m3/sec at a speed of 1450 rpm against a head of 25 m. The impeller diameter is 250 mm, its width at the outlet is 50 mm, and its manometric efficiency is 75%. Calculate the vane angle at the outer periphery of the impeller.	**5**	**3**	**10**

CO-COURSE OUTCOME **KL-KNOWLEDGE LEVEL** **M-MARKS**

NOTE: Questions can be given as A,B splits or as a single Question for 10 marks

Estd. 1980
SRKR
ENGINEERING COLLEGE
AUTONOMOUS